Rewarding Learning

Centre Number

Candidate Number

General Certificate of Secondary Education
2025

Physics

Unit 3: Practical Skills

Booklet A

Higher Tier

[GPY33]

GPY33

TIME

2 hours.

INSTRUCTIONS TO CANDIDATES

Write your Centre Number and Candidate Number in the spaces provided at the top of this page.
You must answer the questions in the spaces provided.
Do not write outside the boxed area on each page or on blank pages.
Complete questions in black ink and use a dark HB pencil for drawings and graphs.
Do not write with a gel pen.
Answer **all** questions.

INFORMATION FOR CANDIDATES

The total mark for this paper is **30**.
Figures in brackets printed down the right-hand side of pages indicate the marks awarded to each question or part question.
Follow all health and safety instructions.
You may use a ruler and scientific calculator if required.
The apparatus and materials required to complete the task(s) are provided.

FOR TEACHER USE ONLY

In experiment 2, please tick the box below to indicate that the candidate did **not** require any help to complete the circuit.

No help was given ☐

15282

16GPY3301

Experiment 1 Density of wood

Introduction

Density is the mass per unit volume. To calculate the density of any solid, its mass in grammes (g) is divided by its volume in cubic centimetres (cm^3).

Aim

The aim of this experiment is to use measurements of volume and mass to find the density of wood.

Apparatus

The diagram below shows the equipment that you will use for this experiment.

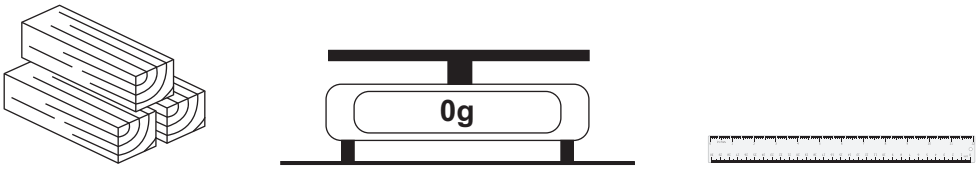

Blocks of wood | Electronic balance | Ruler

Source: Chief Examiner

During **(a)(i)** to **(a)(iii)**, you may work on your own or as part of a group of two or three.

Procedure

(a) (i)

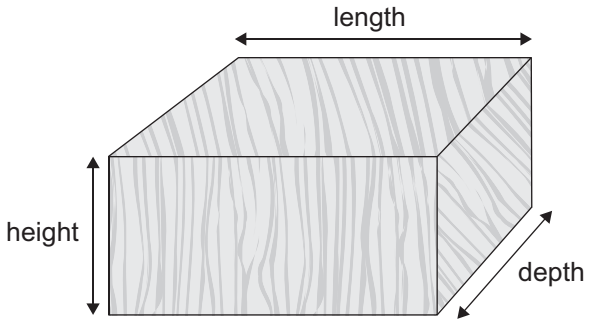

Source: Chief Examiner

Use the ruler to measure the length of each block of wood.
Record each measurement **to the nearest whole number** in **Column 1** of **Table 1**.

The measurements of height and depth have already been added to the table.

Table 1

	Column 1	Column 2	Column 3
Block	**Length /cm**	**Height /cm**	**Depth /cm**
A		6	4
B		6	4
C		6	4
D		6	4
E		6	4

[2]

[Turn over

(ii) Calculate the volume of each block.
Record this result to the **nearest whole number** in **Column 4** of **Table 2**.
Add the unit for volume to the heading of **Column 4** of **Table 2**.

Table 2

	Column 4	Column 5
Block	**Volume /**	**Mass /**
A		
B		
C		
D		
E		

Insert units for each column

[3]

Use the space below for your calculations.

(iii) Use the balance to measure the mass of each block of wood.
Record each measurement to the **nearest whole number** in **Column 5** of **Table 2**.
Add the unit for mass to the heading of **Column 5** of **Table 2**. [2]

When you have taken all the measurements, or when your teacher tells you that 30 minutes are over, stop using the apparatus.

To complete the remainder of the assessment you must work alone.
Your teacher will direct you to a place to do this.

Analysis of data

(b) (i) On the grid below, use your data in **Table 2** to plot a graph of **mass (y-axis)** against **volume (x-axis)**.
Use × or ⦿ to show the points. [2]

(ii) Label each axis with the quantity and unit. [2]

(iii) Draw the best fit line through your points. [1]

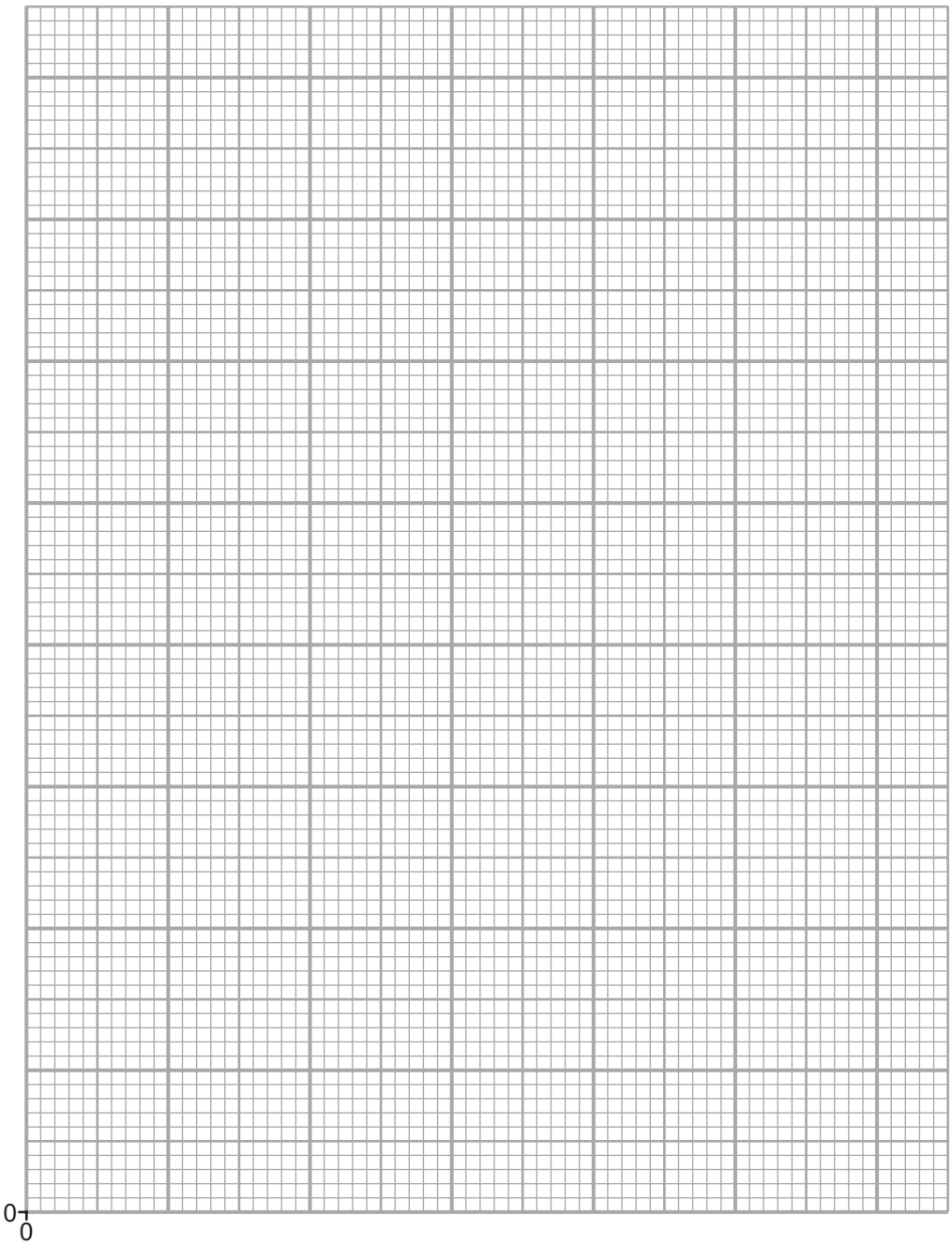

[Turn over

Interpretation of data

(c) The mass, volume and density are related by the equation

$$\text{mass} = \text{density} \times \text{volume}$$

Use your best fit line to find the density of the wood.
Give your answer to **one decimal place**.
State the unit for density with your answer.
Show your working out.

Density = _____

Unit for density _____ [3]

15282

BLANK PAGE

DO NOT WRITE ON THIS PAGE

(Questions continue overleaf)

Experiment 2 Electrical resistance

Introduction

The current passing through a coil of resistance wire depends on the voltage applied across the wire. The wire has electrical resistance.

Aim

The aim of this experiment is to use the measurements of voltage and current to plot a voltage–current characteristic graph for a coil of resistance wire.

Apparatus

The circuit required is shown in the diagram below.

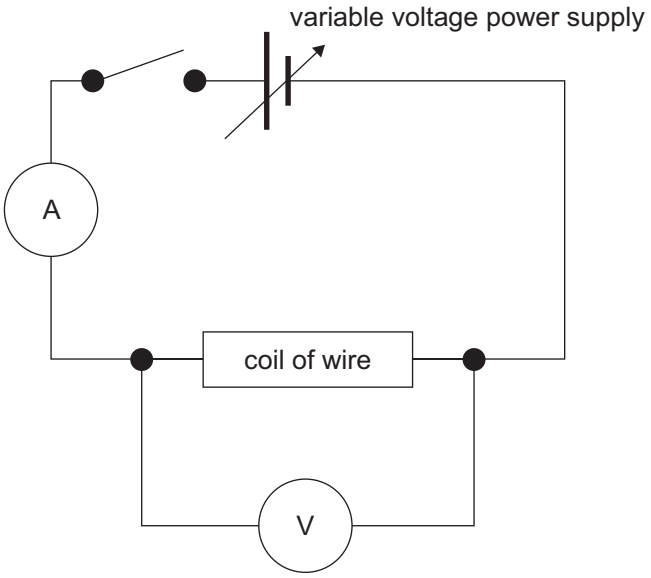

Source: Chief Examiner

During **(a)(i)** to **(a)(iv)**, you may work on your own or as part of a group of two or three.

Procedure

(a) (i) The circuit has not been fully set up.
Complete the circuit by adding the coil of wire, ammeter and voltmeter.
Build the circuit according to the circuit diagram shown opposite.
Your teacher must check your circuit before you continue. [2]

(ii) You are going to measure the voltage across the coil of wire and the current flowing through the coil of wire, keeping the temperature of the wire constant.
Add column headings with units to **Column 1** and **Column 2** of **Table 3**. [1]

(iii) Close the switch and measure the voltage and current.
Record your measurements in **Column 1** and **Column 2** of **Table 3**.
Record your measurements to **one decimal place**.
Open the switch.
You must switch off the current for 10 seconds to allow the coil of wire to cool. [1]

(iv) Close the switch.
Increase the voltage by approximately 0.5 V or 1.0 V by adjusting the output of the power supply.
Measure the new voltage and current and record your measurements in **Column 1** and **Column 2** of **Table 3**.
Record your measurements to **one decimal place**.
Open the switch after you take each measurement of voltage and current.
You must switch off the current for 10 seconds to allow the coil of wire to cool.
Repeat until you have a total of **5 sets of voltage and current** measurements.
Switch off the power supply when you have taken all your measurements. [2]

[Turn over

Results

Table 3

Column 1	Column 2

Insert column heading here with unit

When you have taken all the measurements, or when your teacher tells you that 30 minutes are over, stop using the apparatus.

To complete the remainder of the assessment you must work alone.
Your teacher will direct you to a place to do this.

BLANK PAGE

DO NOT WRITE ON THIS PAGE

(Questions continue overleaf)

Analysis of data

(b) **(i)** On the grid opposite use your measurements to plot a **V – I** graph for the wire.
Use the y-axis for the voltage and the x-axis for the current.
Label each axis with the quantity and its units.
Mark each point clearly using × or ⊙ [4]

(ii) Draw a best fit straight line through your points. [1]

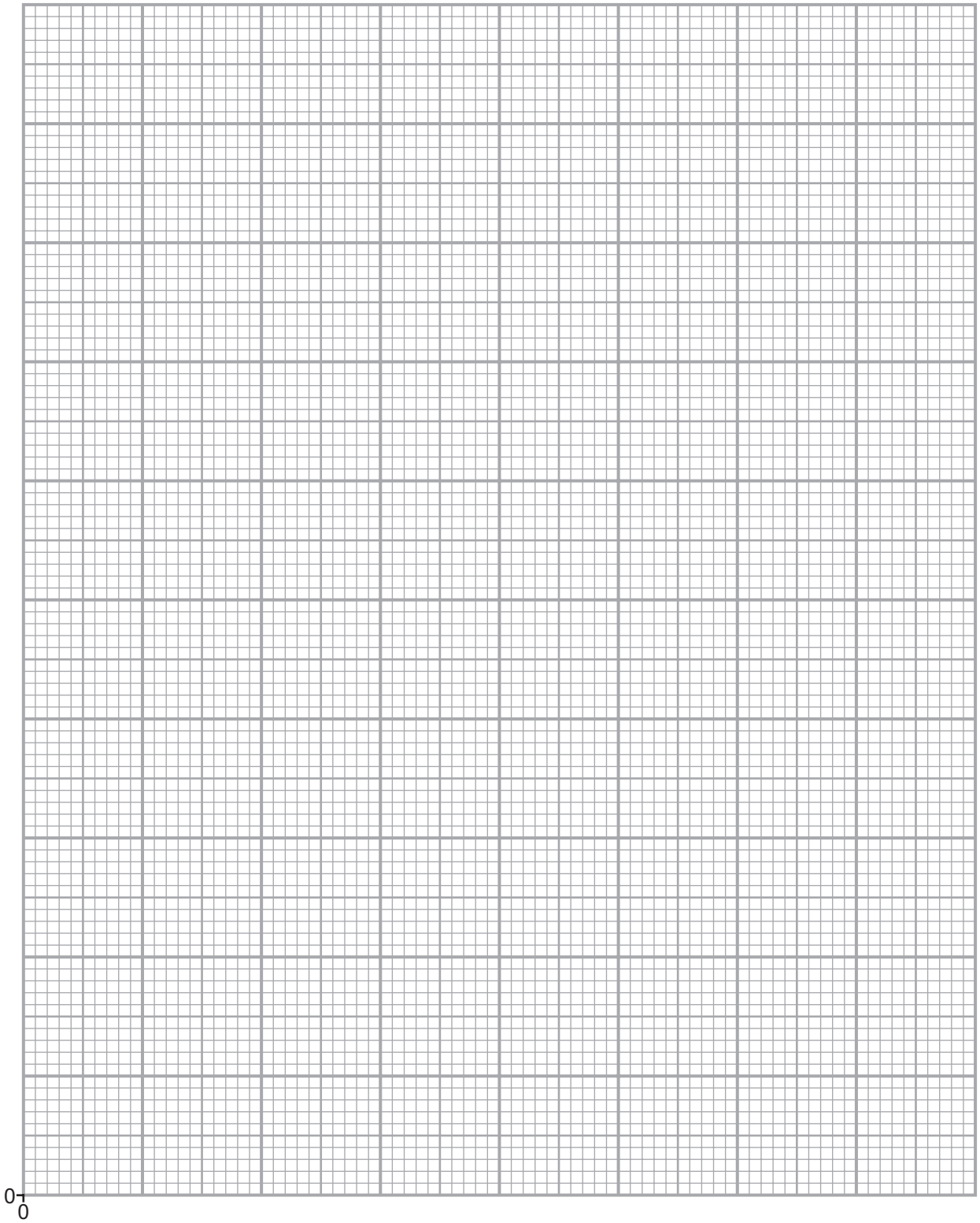
0
0

Interpretation of data

(c) (i) Using your best fit line, calculate the resistance of the wire when the voltage is 4.0 V and 5.0 V.
Give your values to **one decimal place**.
Show your working out.

Resistance at 4.0 V = _____ Ω

Resistance at 5.0 V = _____ Ω [3]

15282

(ii) The diagrams below show three graphs.
Which one best shows how the **resistance** of the coil of wire varied with the voltage across the coil of wire? Tick (✓) the correct graph. [1]

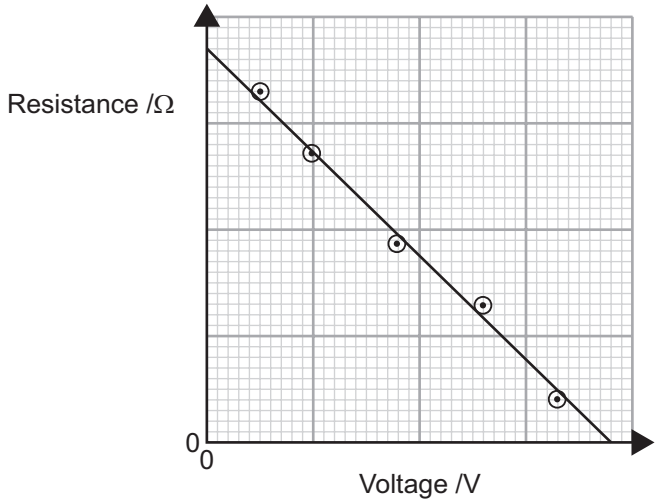

☐

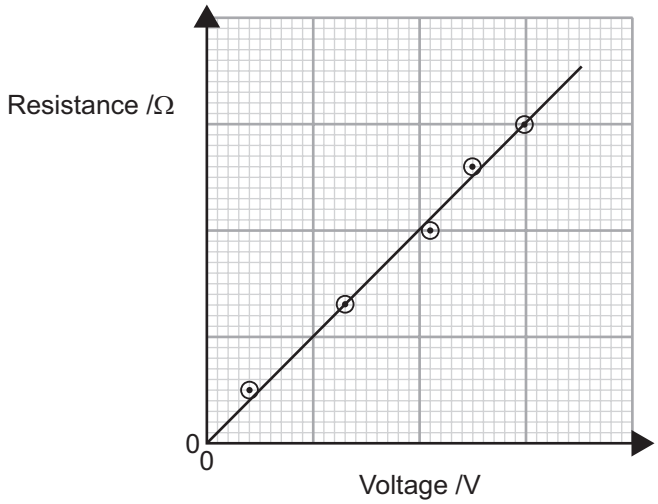

☐

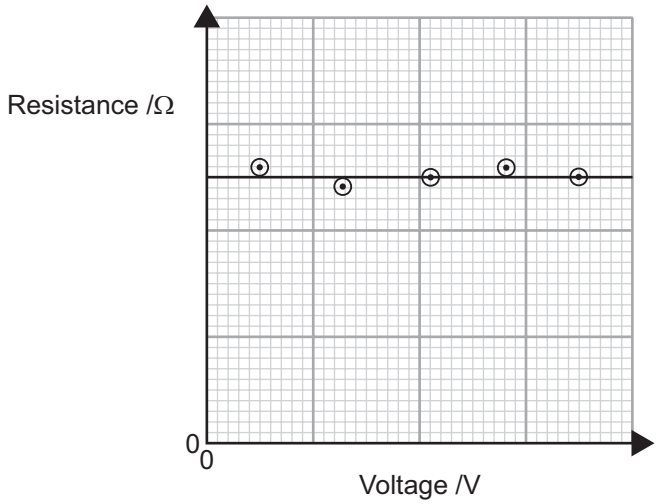

☐

DO NOT WRITE ON THIS PAGE

Examiner's use only	Marks
Experiment 1	
Experiment 2	
Total Marks	

Permission to reproduce all copyright material has been applied for.
In some cases, efforts to contact copyright holders may have been unsuccessful and CCEA will be happy to rectify any omissions of acknowledgement in future if notified.

Rewarding Learning

General Certificate of Secondary Education
2025

Physics

Unit 3: Practical Skills

Booklet A

Higher Tier

[GPY33]

APPARATUS AND MATERIALS LIST AND CONFIDENTIAL INSTRUCTIONS

To be accessed by Head of Department only

It is the responsibility of the centre to ensure that appropriate risk assessments are carried out for all practical skills assessments.

15282.02

Experiment 1 Density of wood

Apparatus and Materials List

The list below shows the apparatus required per group.

- Electronic balance to measure up to 1000 g and to the nearest 1 g.
- Plastic ruler 30 cm in length with 1 mm divisions.
- Five blocks of wood, each labelled A, B, C, D and E.
  The dimensions of each block are shown below.
  A 50 mm × 37 mm × 63 mm
  B 100 mm × 37 mm × 63 mm
  C 150 mm × 37 mm × 63 mm
  D 200 mm × 37 mm × 63 mm
  E 250 mm × 37 mm × 63 mm

A suitable length of planed whitewood is available from building suppliers or DIY stores, 2.4 m × 37 mm × 63 mm.
These should be cut into the sizes shown above.
Please note: on the candidate's question paper the height and depth measurements will be stated as 4 cm and 6 cm respectively.
Candidates do not have to measure these dimensions.
The length to be measured should be clearly marked on each block as shown below.

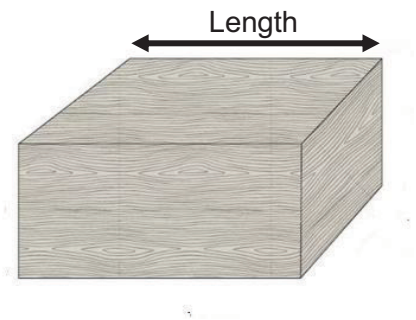

Teachers' instructions

The five blocks should be left on the bench.
Each to be labelled A, B, C, D, and E according to the measurements listed above.
Ensure the electronic balance is set to measure to the nearest 1 g.
It is not necessary for each group to have an electronic balance; these can be positioned so that groups can share.
Action at changeover – ensure electronic balance is reset to zero.

Supervision of the Practical Skills Assessment

Up to 30 minutes collecting results, with the candidates working individually or collectively in a group of maximum size three.
Then 30 minutes with all candidates working individually under full examination conditions with a high level of control to complete the booklet.

Experiment 2 Electrical Resistance

Apparatus and Materials List

- Switch
- A suitable variable power supply
- If you plan to use a stepped power supply, ensure candidates can obtain 5 values of voltage from 0 – 10 V
- Digital ammeter capable of measuring 0 – 2 A, 0.1 A divisions
- Digital voltmeter capable of measuring 0 – 10 V, 0.1 V divisions
- 50 cm of 28 SWG Nichrome wire (approx. 5Ω) wound into a coil on a wooden dowel (or pencil)
- 2 crocodile clips
- Stackable connecting leads with 4 mm plugs
- Warning to candidates on bench 'Do not touch wire as it may be hot.'

Teachers' instructions

The partial circuit shown below should be set up by the teacher.

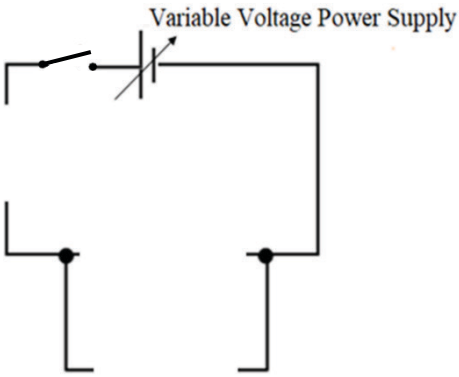

Gaps to be left for the ammeter, voltmeter and coil of wire.

If the candidate is unable to complete the circuit without help, you should connect the three components into the circuit.
If the candidate did **not** require help to complete the circuit, you should tick the box on the front cover of the question paper to indicate this.
If the box on the front cover is left unticked, it will be assumed that the candidate required help to complete the circuit and will not be awarded these marks.

When the circuit is complete, switch on the power supply and adjust until the voltmeter reads a low voltage, either 1.0V of 2.0V. Switch off the power supply.
Check that the power supply is switched off when the candidate has finished taking measurements.
Action at changeover – remove coil of wire, ammeter and voltmeter from circuit.

Supervision of the Practical Skills Assessment

Up to 30 minutes collecting results, with the students working individually or collectively in a group of maximum size three.
Then 30 minutes with all students working individually under full examination conditions with a high level of control to complete the booklet.